Boreart Signature Series Saint-Charles Curved

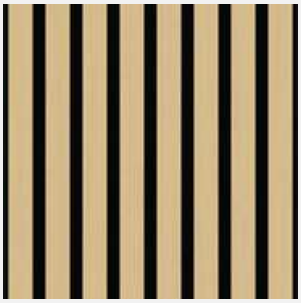

Combining acoustic performance and architectural design, the Saint-Charles Curved Signature Series offers high-end soundproofing panels designed for interior walls and ceilings. Thanks to their sound absorption capacity, they eliminate reverberation and ensure optimal acoustic comfort. Easy to install and with no visible screws, these panels are made from high-quality real wood veneer laminated onto natural or black MDF for an elegant and durable finish.

The panels can be curved inward (concave) or outward (convex), depending on the project requirements. This feature allows for great freedom of design and integration into environments with curved shapes or complex volumes, without compromising acoustic performance or aesthetic quality.

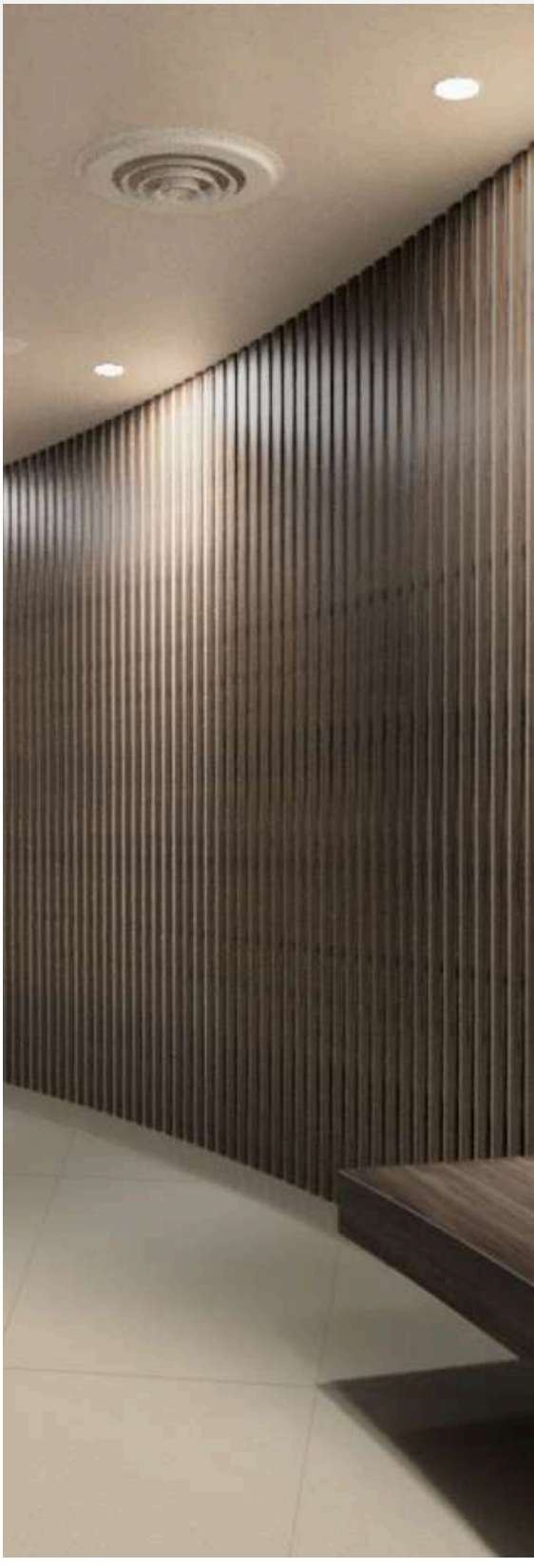

CHARACTERISTICS

Nominal panel size	21-7/8" x 96"
Panel material	Natural or black MDF Available upon request in Fire-resistant MDF (FR) - Moisture-resistant MDF (MR)
Slat sizes and spacing	One standard size; see the drawing on page 2. Custom sizes and spacing are available.
Finishing molding	2-1/4" x 96"
Melamines	Five (5) standards melamines, Natural, Mist, Amber, Torrefied et Charcoal - other melamines available upon request
Acoustic material	Polyester and recycled plastic felt - 3.5 mm - 33 color options. See page 3. Noise Reduction Coefficient (NRC) up to 0.70.
Fire resistance	ASTM E-84 - Class A | Class 1 Flame spread index = 0-25 Smoke production index = 450 max NAF
Environment	Made from materials consisting of 100% pre-consumer recycled wood, FSC certified, and subject to an NAF (no added formaldehyde) exemption.*
Use	Interior; residential, commercial, and institutional
Installation	Rigid panels and easy installation Vertical or horizontal installation For interior walls and ceilings
Others	High-performance acoustic properties offering excellent sound reduction Finishing moldings available

*Specifications regarding pre-consumer recycled wood, FSC certification, and SFA exemption vary depending on the materials used. For more information about a specific material, please contact us.

SAINT-CHARLES CURVED PANEL, 22“ X 96”, WITH DIMENSIONS

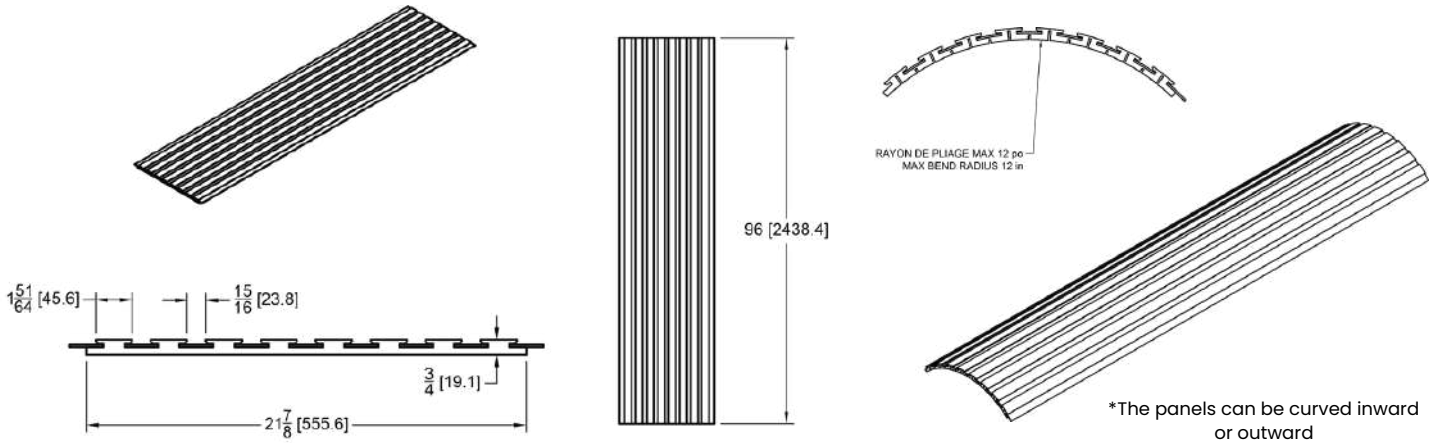

*The panels can be curved inward or outward

Saint-Charles Curved panel	**Approximate weight**	35.32 lbs
	Total area	14.67 ft^2
Acoustic material Felt - Fire resistant	**Size**	15/16" x 96"
	Thickness	0.1378" (3.5 mm)

For more details on installation, please refer to the Boreart Signature Series Saint-Charles Curved installation guide on the website www.boreart.ca.

MELAMINES



01 Natural **02** Mist **03** Amber **04** Torrefied **05** Charcoal

*Please note that the colors shown may differ slightly from the actual colors due to variations in display rendering. For more details, please contact Boreart.

ACOUSTIC PERFORMANCE

Saint-Charles Curved panels are designed to reduce ambient noise. Noise Reduction Coefficient (NRC) up to 0.70.

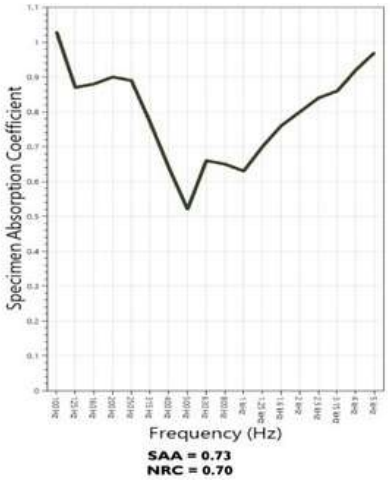

1/3 Octave Center Frequency (Hz)	Total Absorption (m^2)	Total Absorption (Sabins)	Absorption Coefficient
100	6.89	74.19	1.03
** 125	5.83	62.74	0.87
160	5.87	63.21	0.88
200	6.03	64.87	0.90
** 250	5.93	63.84	0.89
315	5.18	55.75	0.77
400	4.30	46.30	0.64
** 500	3.48	37.47	0.52
630	4.41	47.43	0.66
800	4.37	46.99	0.65
** 1000	4.21	45.31	0.63
1250	4.70	50.58	0.70
1600	5.06	54.46	0.76
** 2000	5.34	57.52	0.80
2500	5.59	60.17	0.84
3150	5.72	61.60	0.86
** 4000	6.13	65.97	0.92
5000	6.50	69.99	0.97

SAA = 0.73
NRC = 0.70

3.5 mm FELT



*Please note that the colors shown may differ slightly from the actual colors due to variations in display rendering. For more details, please contact Boreart.

info@boreart.ca | 450 344-0505

WARRANTY

Boreart offers a 3-year limited warranty on all its panels. For more details on the limited warranty, please contact Boreart.

USE & STORAGE

Wood products are hygroscopic by nature and must be installed flat and maintained in a building with a controlled environment. The temperature must be maintained between 15° and 30°C. Relative humidity must be maintained between 25% and 55%.

The advice and recommendations are purely advisory.

Handling and storage - panels must be stored in such a way as to protect them from moisture and direct sunlight. Panels should preferably be stored face to face or with the decorative side facing up, flat, completely horizontal, and level.

When handling or moving panel, it is important that the sheets are lifted above the adjacent sheets to avoid damage that may occur if the sheets are pulled or slid against each other. For larger formats, it is recommended that arched sheets be carried along the longitudinal axis to prevent sagging. Individual sheets can also be rolled up for easier handling.

Failure to comply with one or more of the above conditions will void the Boreart Architectural Products warranty.

Large orders of Boreart products are packaged and shipped in wooden crates and/or on 4'x4' wooden pallets.

HOW TO ORDER

To order a product, please write to **info@boreart.ca** using the following template to ensure maximum accuracy.

The first characters are the pattern code, followed by the melamine code, the panel material, the desired dimensions, and the last letters represent the complete color of the felt.

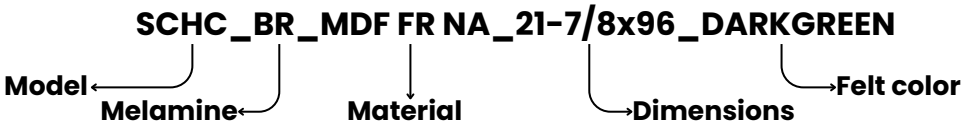

Model	Melamine		Material		Dimensions	Felt color
Saint-Charles Curved : SCHC	Natural :	NA	Natural MDF :	MDF NA	21-7/8x96	See page 3 for felt colors
	Mist :	BR	Black MDF :	MDF NO		
	Amber :	AM	Natural FR MDF :	MDF FR NA		
	Torrefied :	TO	Natural MR MDF :	MDF MR NA		
	Charcoal :	CH				

*Since our panels are custom-made, they are also available in other colors and sizes to meet more specific needs. For any custom orders, please contact us by email or phone.